MTLT305D Series

Dynamic Tilt Sensor / IMU Module

The ACEINNA MTLT305D is a dynamic tilt sensor, 3D accelerometer and 3D Rate Sensor (Gyro) with CAN J1939 and RS232 Interfaces. The MTLT305D integrates highly reliable MEMS based accelerometers and gyroscopes, a 32-bit microprocessor, protection and supporting circuitry for robust operation in many environments. The MTLT305D uses advanced sensor fusion, Extended Kalman Filtering and calibration algorithms to achieve 0.5 degree tilt and <10 milli-g acceleration accuracy in a wide variety of dynamic conditions. The MTLT30xD available in an IP68, 69K plastic enclosure with an IP67 Ampseal 16 6 position connector.

MTLT305D Series

Dynamic Tilt Sensor / IMU Module

Applications

- Construction (boom tilt measurement, bucket leveling)
- Tilt/slope safety for dynamic vehicles (forklift, aerial lifts)
- Vehicle Attitude Monitoring
- Robotics Control

Construction

Aerial Lift

Platform

Features

- High Performance 3 axis MEMS Accelerometer and Inclination Sensor
- Gyro compensated with Extended Kalman Filter for Dynamic conditions
- 0.15° Static accuracy
- 0.50° Dynamic accuracy
- CAN 2.0 J1939 Interface
- Miniature IP68, 69K enclosure
- (65 x 66 x 27 mm)
- Wide Temp Range, -40C to +85C
- High Reliability, MTBF > 50k hours
- ITAR- Free

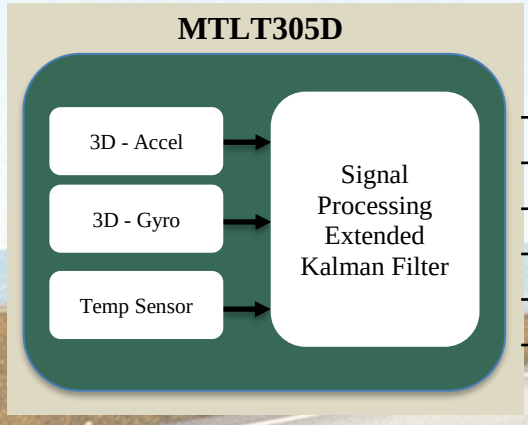

Tools and Support

NAV-VIEW provides an easy to use graphical interface to display, record, playback, and analyze all the MTLT305D parameters over the RS232 port.
NAV-VIEW can also be used to set a wide range of user-configurable fields in the MTLT305D to optimize the system performance for your dynamic applications.
NAV-VIEW software is available for download from ACEINNA's website at: www.aceinna.com/support

info@aceinna.com | www.aceinna.com

Document: 6020-3305-01_D

MTLT305D Series

Dynamic Tilt Sensor / IMU Module

Performance Characteristics

Ta = 25°C, VDC = 15.0V, unless otherwise stated

Sensor Performance	
	MTLT305D
Axes (Tilt)	Pitch; Roll
Range	±70°, ±180°
Resolution	<0.05°
Max Angular Rate	≤400 °/s
Static Accuracy[1] TA = 25 C	0.15°
Dynamic Accuracy[2]	0.50°
Temperature Stability[3]	0.05°
Axes (Acceleration)	X, Y, Z
Range	±78 m/s/s
Resolution	0.01 m/s/s
Accuracy (±1g input; -40 to 85C)	±0.1 m/s/s
Output Data Rate (Hz)	Selectable to 100 Hz
Electrical	
Input Voltage	4.9 V – 32 V
Power Consumption	<400 mW
Interface	CAN 2.0 J1939
Environment	
Operating Temperature (°C)	-40 °C to 85°C
Non-Operating Temperature (°C)	-40 °C to 85°C
Physical	
Enclosure	Plastic
Interface	Ampseal 16 6 Position
Size (mm)	65 x 66 x 27
Protection Class	IP 68, 69K (IP67 Mated)

Note 1: RMS Error over entire operating angle range
Note 2: RMS Error during 50-minute Passenger Vehicle Drive test, referenced to Novatel system
Note 3: RMS Error of deviation from 25C value. Pitch and Roll = 0

Absolute Maximum Ratings	
Input Voltage (V)	36 (1hr)
Load Dump	ISO16750-2(2010) pulse 5b (Vc = 56V, Ri = 8Ω)
Shock	1000 g ½ sine 0.1 ms any Axis

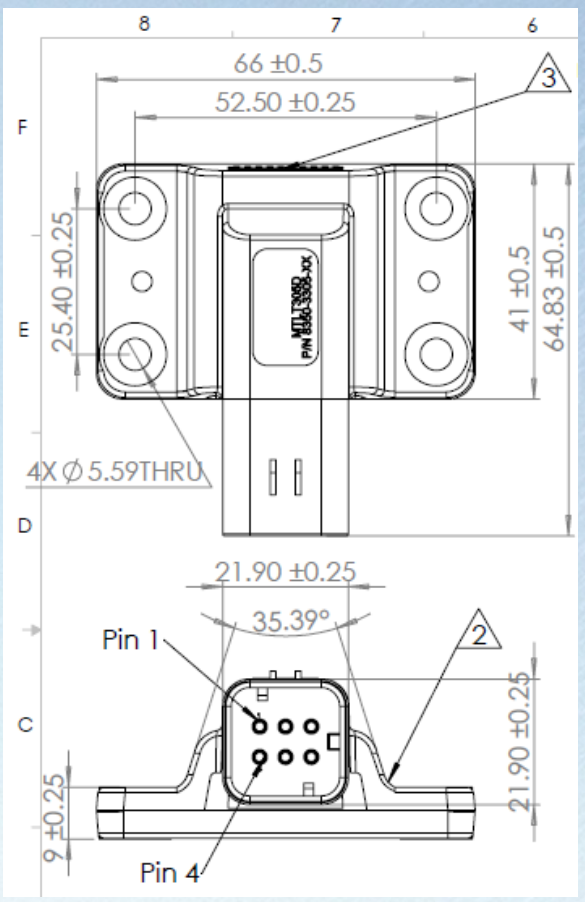

Part Ordering Information	
MTLT305D	3D Rate, 3D Linear Acceleration and Pitch and Roll Sensor
MTLT305D Cable	Mating Connector with Flying leads

This product has been developed exclusively for commercial applications. It has not been tested for, and makes no representation or warranty as to conformance with, any military specifications or its suitability for any military application or end-use. Additionally, any use of this product for nuclear, chemical or biological weapons, or weapons research, or for any use in missiles, rockets, and/or UAV's of 300km or greater range, or any other activity prohibited by the Export Administration Regulations, is expressly prohibited without the written consent and without obtaining appropriate US export license(s) when required by US law. Diversion contrary to U.S. law is prohibited. Specifications are subject to change without notice.

MTLT305D Series

Dynamic Tilt Sensor / IMU Module

Supplemental Performance Information

Static Angle Accuracy and Temperature Stability

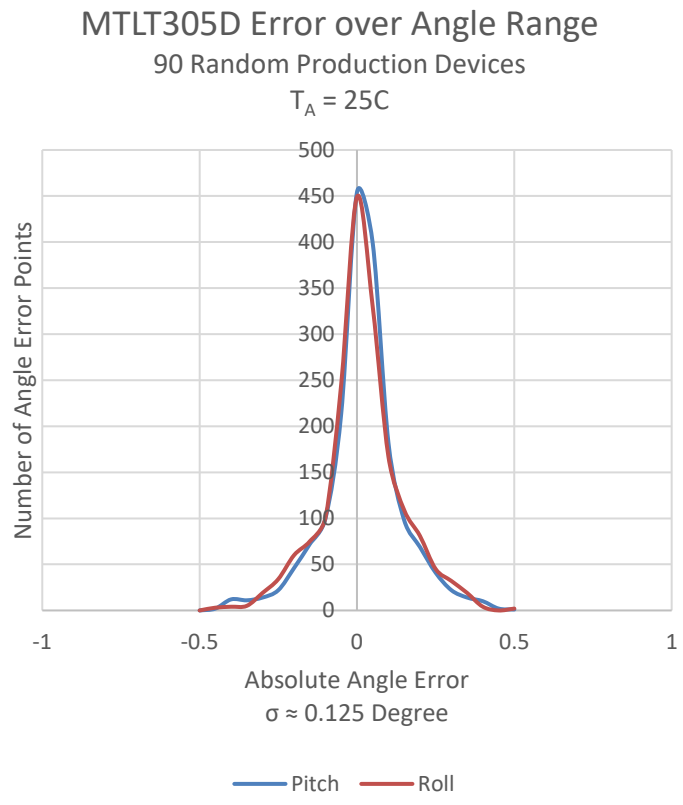

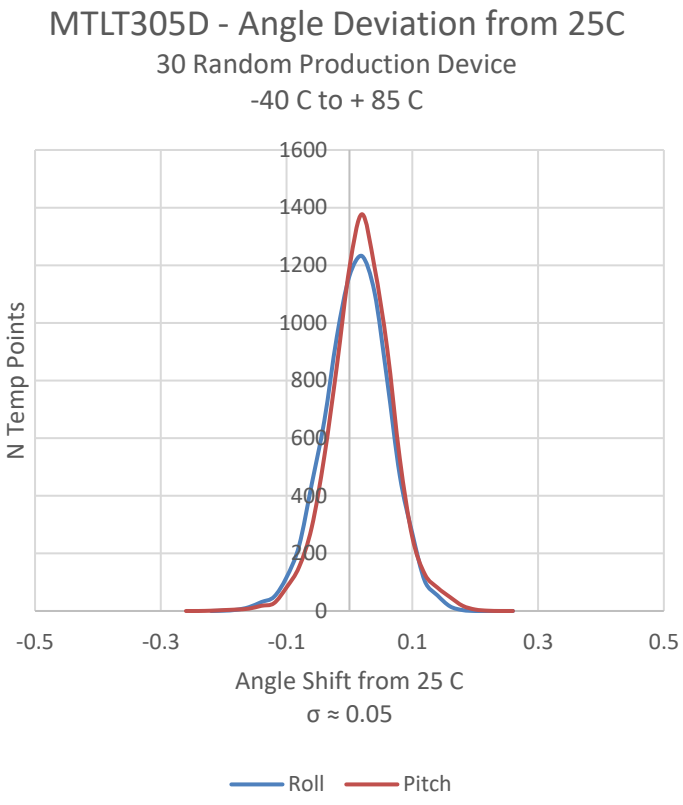

Dynamic Performance

RMS Error of MTLT305D as compared to Novatel Reference unit during 50 minute passenger vehicle Drive Test

Roll RMS Error	Pitch RMS Error
0.394	0.346

Roll and Roll Error During Drive Test

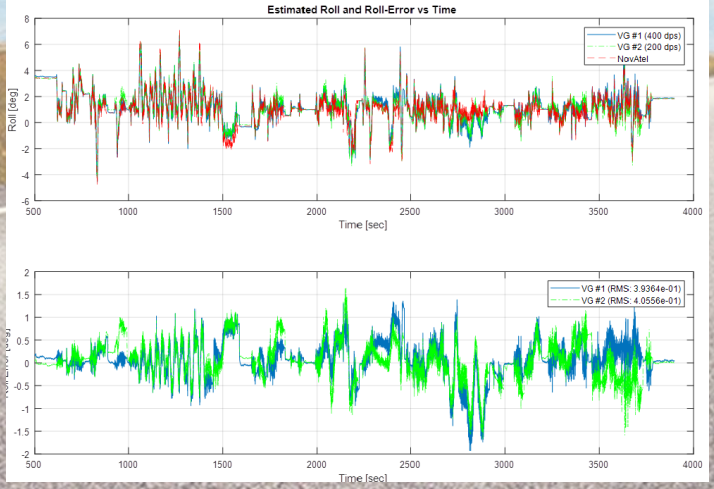
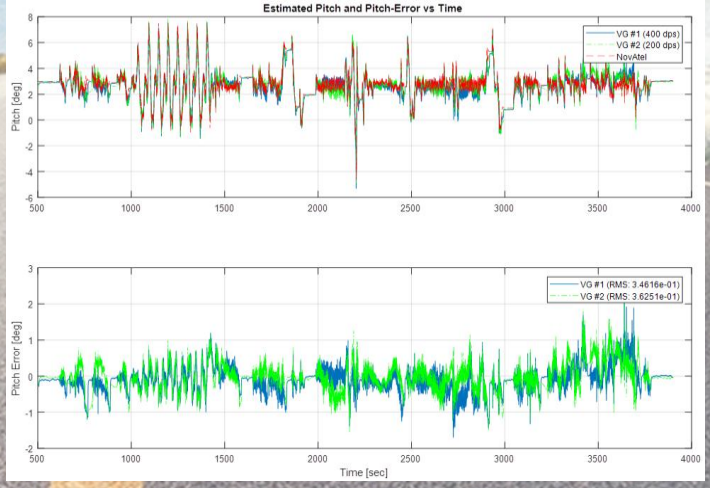
Pitch and Pitch Error During Drive Test