High Accuracy Current Sensor IC with 5.0MHz 3dB Bandwidth and Isolation ±5A, ±20A, ±50A, 3.3V, Ratiometric

MCR1101-xx-3

FEATURES

- **AMR based integrated current sensor**
- **Superior Range & Accuracy**
  - **0.6% typical total error @25°C (MCR1101-20-3)**
  - **2.0% max error over temperature (MCR1101-20-3)**
- **Superior Frequency Response**
  - **5.0 MHz (typical 3dB Magnitude BW)**
  - **1.3 MHz (typical 45deg Phase BW)**
- **Fast output response time (80ns typical)**
- **Low Primary Resistance (0.9 mΩ)**
- **Single 3.3V Supply Operation**
- **Low power consumption (4.5mA typical)**
- **Overcurrent fault detection**
- **SOIC-16 package (RoHS/REACH compliant)**
- **-40 to +105°C Operating Temperature Range**
- **UL/IEC/EN62368-1 Certified**
  - **4.8 kV Dielectric Strength Voltage**
  - **1600 VRMS Basic Isolation Voltage**
  - **800 VRMS Reinforced Isolation Voltage**
- **Improved capability of reducing capacitive coupling from primary conductor to die due to dV/dt transient**

APPLICATIONS

Server, Telecom, & Industrial Power Supplies
- **Power Aggregation, Over-Current Protection**
- **Dynamic Current Sensing in Feedback Loops**
- **PFC and Inverter Control**

Motor Control Loops & Protection
- **Automation, Robotics, Servo Systems**
- **Automotive & EV Power Systems**

Solar Inverters and Optimizers
- **Grid-Tie and Storage Current Monitoring**
- **MPPT Circuit Current Monitoring**
- **Central Inverter Current Monitoring**

Consumer
- **Motor Balance and Remote Device Monitoring**
- **Home Automation Control & IOT remote sensing**

DESCRIPTION

The MCR1101 products are ±5A, ±20A, ±50A fully integrated bi-directional analog output current sensors that deliver both high accuracy and high bandwidth. ACEINNA's state-of-the-art Anisotropic Magneto Resistive (AMR) sensor technology provides inherently low noise, excellent linearity and repeatability.

A fully isolated current path is provided by a low resistance copper conductor integrated into the package making it suitable for both high-side and low side bi-directional current sensing. The high bandwidth of 5.0MHz (3dB) and low phase delay makes it ideal for current sense feedback loops in motor control, inverters, uninterruptible power supplies, battery management, power factor correction, high voltage distribution bus converters and power supply applications, including those with fast switching wide-bandgap SiC and GaN based power stages.

These devices are factory-calibrated to achieve low offset error and provide a precise analog voltage output that is linearly proportional to the conduction current (AC or DC) with sensitivity (mV/A) compatible with A/D converters and analog control loops in power systems. The AMR sensor device structure is designed to eliminate sensitivity to stray and common mode magnetic fields.

Due to the inherently low output noise of ACEINNA's sensor technology, additional filtering is not required to reduce noise that reduces accuracy at low-level currents in systems with dynamic load profiles.

The MCR1101 products in SOIC-16 package are simple to use with no or minimal external components (other than decoupling capacitor), supports high isolation and are UL/IEC/EN62368-1 certified.

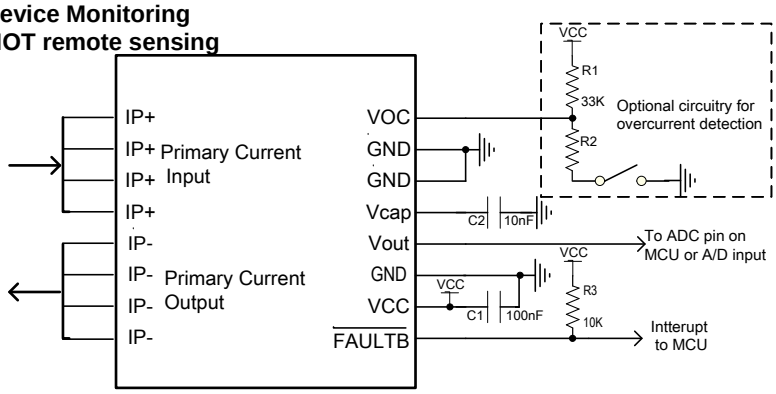

Figure 1 - Application Circuit

Information furnished by ACEINNA is believed to be accurate and reliable. However, no responsibility is assumed by ACEINNA for its use, or for any infringements of patents or other rights of third parties which may result from its use. No license is granted by implication or otherwise under any patent or patent rights of ACEINNA. ACEINNA reserves the right to change this specification without notification.

ORDERING PART NUMBER

Ordering PART NUMBER	Part Marking (See Page 13)	Current Range	Gain	VCC (typical)	Dielectric Strength	Package	Qty per Reel
MCR1101-5-3	MCR1101053	±5 Amp	Ratiometric	3.3V	4800V	16 Lead SOIC	1000 pcs
MCR1101-20-3	MCR1101203	±20 Amp	Ratiometric	3.3V	4800V	16 Lead SOIC	1000 pcs
MCR1101-50-3	MCR1101503	±50 Amp	Ratiometric	3.3V	4800V	16 Lead SOIC	1000 pcs

Note: Evaluation boards are available for each product version (order EVB-MCx1101-xx-x)

PIN DESCRIPTION

Pin # 16L SOIC	Name	Description
1,2,3,4	IP+	Input of Primary Current Path for Sensing, Fused internally
5,6,7,8	IP-	Output of Primary Current Path for Sensing, Fused internally
9	$\overline{\text{FAULTB}}$	Overcurrent FAULTB open drain output. Active low.
10	VCC	System Power Supply
11	GND	Recommended to connect to ground
12	Vout	Analog Output Signal linearly proportional to Primary Path Current
13	Vcap	Connect 10nF capacitance to ground
14	GND	Used during initial factory calibration. This pin should be connected to ground or left floating during normal operation.
15	GND	Connect to ground
16	VOC	Input pin. Voltage on this pin defines the overcurrent detection OCD threshold level. Briefly driving this pin to VCC resets and re-arms OCD circuit.

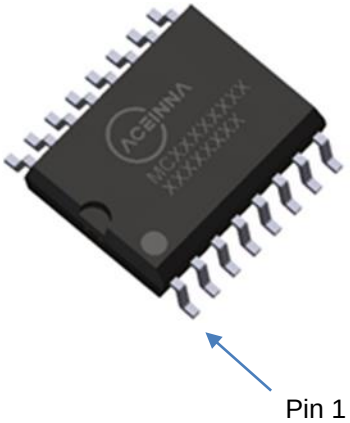

16-pin SOIC

BLOCK DIAGRAM

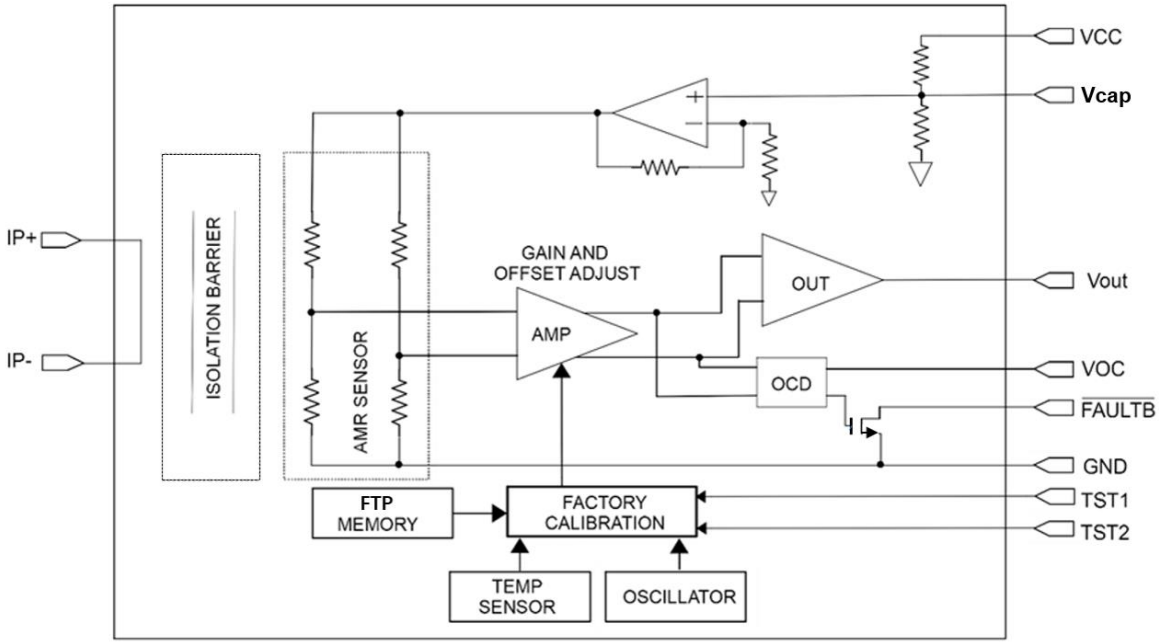

Figure 2 - Block diagram for ratiometric gain products

Table 1 – ABSOLUTE MAXIMUM RATINGS

Stresses above these ratings may cause permanent damage. Exposure to absolute maximum conditions for extended periods may degrade device reliability. These are stress ratings only, and functional operation at these or any other conditions beyond those specified is not implied.

Parameters / Test Conditions	Symbol	Value	Unit
Supply Voltage	VCC_{MAX}	-0.5 to 6	V
FAULTB Output Voltage	$V_{\overline{FAULTB}}$	-0.5 to VCC+0.5V	V
Sensor Current (IP+, IP-), 5Amp products	IP_{MAX}	±100	A
Sensor Current (IP+, IP-), 20Amp products	IP_{MAX}	±100	A
Sensor Current (IP+, IP-), 50Amp products	IP_{MAX}	±100	A
Maximum Device Junction Temperature	T_{JMAX}	150	°C
Storage Temperature	T_{STG}	-65 to +150	°C
Operating Ambient Temperature Range	T_A	-40 to 105	°C
ESD Human Body Model / per ANSI/ESDA/JEDEC JS-001	HBM	8000	V
ESD Charged Device Model / per JEDEC specification JESD22-C101	CDM	2000	V
MSL Rating	MSL	3	
Maximum Soldering Temperature, 10 seconds.	T_{SOLDER}	260	°C

Table 2 – ISOLATION CHARACTERISTICS

Parameters / Test Conditions	Symbol	Value	Unit
Dielectric Strength Test Voltage (Agency type-tested for 60 seconds per UL standard 62368-1 (edition 2). Production tested at 3kVrms per UL 62368-1.	V_{ISO}	4800	V
Working Voltage for Basic Isolation. Maximum approved working voltage according to UL 62368-1 (edition 2)- ($V_{PK/DC}$ / V_{RMS})	V_{WVBI}	2262 / 1600	V
Working Voltage for Reinforced Isolation ($V_{PK/DC}$ / V_{RMS})	V_{WVRI}	1131 / 800	V
Clearance (Minimum distance through air from IP leads to signal leads)	D_{CL}	8.0	mm
Creepage (Minimum distance along package body from IP leads to signal leads)	D_{CR}	8.0	mm
Comparative Tracking Index	CTI	≥ 600	V

Table 3 – THERMAL CHARACTERISTICS

Parameters / Test Conditions	Symbol	Value	Unit
Junction-to-Ambient Thermal Resistance(Note 1)	$R_{\theta JA}$	27	°C/W
Junction-to-Lead Thermal Resistance	$R_{\theta JC}$	10	°C/W

Note 1 – The $R_{\theta JA}$ measured on the EB0011- evaluation board with 800mm2 of 4oz copper on each layer(top and bottom), thermal vias connecting the layers. The performance values include the power consumed by the PCB.

Table 4 – ELECTRICAL CHARACTERISTICS COMMON TO ALL VERSIONS

Unless otherwise noted: 3.15V ≤ VCC ≤ 3.45V, -40°C ≤ T_A ≤ 105°C, I (Vout) = 0 (Recommended Operating Conditions).
Typical values are for VCC = 3.3V and T_A = 25°C.

Parameter	Symbol	Test Conditions	Min	Typ	Max	Unit
Vout Output						
Load Regulation	$Vout_{LR}$	Increase I (Vout) from 0 to -250µA. Measure change in Vout voltage		0.7	4	mV
Source Current	$Vout_{SRC}$	Vout shorted to GND			50	mA
Sink Current	$Vout_{SNK}$	Vout shorted to VCC			30	mA
Magnitude Frequency Response (-3dB)	$Vout_{BW}$	(Note 2)		5000		kHz
Capacitive Loading	$CVout_{MAX}$	(Note 2)			200	pF
Resistive Loading	RL_{MIN}	Minimum load resistance on Vout & Vcap. (Note 2 and Note 3)	10			kohm
Response Time	t_{RESP}	IP± = 0 to +/-100% step input, Interval from 80% of the IP to 80% of the Vout. (Note 2)		80		ns
Noise Density	I_{ND}	Input Referred, VCC=3.3V, TA = 25°C, CL=200pF, DC to 100 kHz.		35		µA/√Hz
Noise (Input Referred)	$Vout_{NOISE}$	IP± = 0, Measure (Vout). DC to 100 kHz. (Note 2)		12		mA (rms)

Note 2 – Guaranteed by design and characterization. Not production tested.
Note 3 – Vcap pin will only support capacitive loads.

Table 5 – ELECTRICAL CHARACTERISTICS COMMON TO ALL VERSIONS

Unless otherwise noted: 3.15V ≤ VCC ≤ 3.45V, -40°C ≤ T_A ≤ 105°C, I (Vout) = 0 (Recommended Operating Conditions).
Typical values are for VCC = 3.3V and T_A= 25°C.

Parameter	Symbol	Test Conditions	Min	Typ	Max	Unit
VCC Bias Supply						
Supply Voltage	VCC		3.15		3.45	V
Supply Current	IVCC	VCC=3.3 V		4.5	6	mA
Power Up Time	TVCC	Time from VCC > 3.0V to valid Vout and Vcap (Note 2)		0.75	1.25	ms
Primary Side Input						
Primary Conductor Resistance	R_{PC}	Measure resistance between IP+ and IP- MCR1101-50 Versions (Note 2)		0.9		mΩ
		Measure resistance between IP+ and IP- MCR1101-20, MCR1101-5 Versions (Note 2)		1.3		

Note 2 – Guaranteed by design and characterization. Not production tested.
Note 3 – Vcap pin will only support Capacitive loads.

Table 6 – PERFORMANCE CHARACTERISTICS- 50A VERSIONS (MCR1101-50-3)

Unless otherwise noted: 3.15V < VCC < 3.45V, I(Vout) = 0, Typical values are for VCC = 3.3V and T_A = 25°C.

Parameter	Symbol	Test Conditions	Min	Typ	Max	Unit
NOMINAL TRANSFER FUNCTION MCR1101-50-3 Vout = VCC/2 + I_{IN} x 25mV/A x VCC/3.3V						
Input Range	I_{IN}	Calibrated Range	-50		+50	A
Sensitivity	GAIN	MCR1101-50-3 (Ratiometric Gain)		25		mV/A
DC ACCURACY						
Zero Current Offset	I_{OFFSET}	I_{IN} = 0, T_A = 25°C to 85°C (Note 4)	-120	±40	120	mA
		I_{IN} = 0, T_A = -40°C to 25°C (Note 5)	-300	±100	300	
Sensitivity Error	E_S	I_{IN} = I_{FS}, T_A = 25°C to 85°C (Note 4)	-1.5	±0.4	1.5	%
		I_{IN} = I_{FS}, T_A = -40°C to 25°C (Note 5)	-2.4	±0.4	2.4	
Linearity Error	E_L	I_{IN} = I_{FS}, T_A = 25°C to 85°C (Note 4)	-1.5	±0.6	1.5	%FS
		I_{IN} = I_{FS}, T_A = -40°C to 25°C (Note 5)	-1.5	±0.5	1.5	
Total Error	E_{TOT}	I_{IN} = ±15A ~ ±50A, T_A = 25°C to 85°C (Note 4)	-2.5	±0.7	2.5	%RD
		I_{IN} = ±15A ~ ±50A, T_A = -40°C to 25°C (Note 5)	-3.6	±0.8	3.6	
LIFETIME DRIFT CHARACTERISTICS						
Zero Current Offset Drift	$I_{OFFSET(D)}$	(Note 6)		±380		mA
Sensitivity Drift	$E_{S(D)}$	(Note 6)		±0.4		%
Total Error Drift	$E_{TOT(D)}$	(Note 6)		±1.4		%FS

Note 4: Typ values are 1σ(|mean|+σ). Min/max values are guaranteed by production test at T_A=25°C and T_A=85°C.
Note 5: Guaranteed by design and characterization. Typ values are 1σ(|mean|+σ), min/max values are 3σ(|mean|+/-3σ).
Note 6: Numbers are based on 3 lots qualification data, taking the shifts from among HTOL (1000 hours). Typical numbers are 1σ(|mean|+σ).

Table 7 – PERFORMANCE CHARACTERISTICS- 20A VERSIONS (MCR1101-20-3)

Unless otherwise noted: 3.15V < VCC < 3.45V, I(Vout) = 0, Typical values are for VCC = 3.3V and T_A = 25°C.

Parameter	Symbol	Test Conditions	Min	Typ	Max	Unit
NOMINAL TRANSFER FUNCTION MCR1101-20-3, Vout = VCC/2 + I_{IN} x 66mV/A x VCC/3.3V						
Input Range	I_{IN}	Calibrated Range	-20		+20	A
Sensitivity	GAIN	MCR1101-20-3 (Ratiometric Gain)		66		mV/A
DC ACCURACY						
Zero Current Offset	I_{OFFSET}	I_{IN} = 0, T_A = 25°C to 85°C (Note 4)	-60	±20	60	mA
		I_{IN} = 0, T_A = -40°C to 25°C (Note 5)	-200	±60	200	
Sensitivity Error	E_S	I_{IN} = I_{FS}, T_A = 25°C to 85°C (Note 4)	-0.7	±0.3	0.7	%
		I_{IN} = I_{FS}, T_A = -40°C to 25°C (Note 5)	-1.2	±0.3	1.2	
Linearity Error	E_L	I_{IN} = I_{FS}, T_A = 25°C to 85°C (Note 4)	-0.7	±0.4	0.7	%FS
		I_{IN} = I_{FS}, T_A = -40°C to 25°C (Note 5)	-1.5	±0.3	1.5	
Total Error	E_{TOT}	I_{IN} = ±6A ~ ±20A, T_A = 25°C to 85°C (Note 4)	-2.0	±0.6	2.0	%RD
		I_{IN} = ±6A ~ ±20A, T_A = -40°C to 25°C (Note 5)	-3.0	±0.8	3.0	
LIFETIME DRIFT CHARACTERISTICS						
Zero Current Offset Drift	$I_{OFFSET(D)}$	(Note 6)		±190		mA
Sensitivity Drift	$E_{S(D)}$	(Note 6)		±0.4		%
Total Error Drift	$E_{TOT(D)}$	(Note 6)		±1.4		%FS

Note 4: Typ values are 1σ(|mean|+σ). Min/max values are guaranteed by production test at T_A=25°C and T_A=85°C.
Note 5: Guaranteed by design and characterization. Typ values are 1σ(|mean|+σ), min/max values are 3σ(|mean|+/-3σ).
Note 6: Numbers are based on 3 lots qualification data, taking the shifts from among HTOL (1000 hours). Typical numbers are 1σ(|mean|+σ).

Table 8 – PERFORMANCE CHARACTERISTICS- 5A VERSIONS (MCR1101-5-3)

Unless otherwise noted: 3.15V < VCC < 3.45V, I(Vout) = 0, Typical values are for VCC = 3.3V and T_A = 25°C.

Parameter	Symbol	Test Conditions	Min	Typ	Max	Unit
NOMINAL TRANSFER FUNCTION MCR1101-5-3, Vout = VCC/2 + I_{IN} x 250mV/A x VCC/3.3V						
Input Range	I_{IN}	Calibrated Range	-5		+5	A
Sensitivity	GAIN	MCR1101-5-3 (Ratiometric Gain)		250		mV/A
DC ACCURACY						
Zero Current Offset	I_{OFFSET}	I_{IN} = 0, T_A = 25°C to 85°C (Note 4)	-60	±20	60	mA
		I_{IN} = 0, T_A = -40°C to 25°C (Note 5)	-60	±20	60	
Sensitivity Error	E_S	I_{IN} = I_{FS}, T_A = 25°C to 85°C (Note 4)	-1.0	±0.5	1.0	%
		I_{IN} = I_{FS}, T_A = -40°C to 25°C (Note 5)	-1.5	±0.4	1.5	
Linearity Error	E_L	I_{IN} = I_{FS}, T_A = 25°C to 85°C (Note 4)	-0.5	±0.3	0.5	%FS
		I_{IN} = I_{FS}, T_A = -40°C to 25°C (Note 5)	-0.75	±0.3	0.75	
Total Error	E_{TOT}	I_{IN} = ±3A ~ ±5A, T_A = 25°C to 85°C (Note 4)	-2.0	±1.3	2.0	%RD
		I_{IN} = ±3A ~ ±5A, T_A = -40°C to 25°C (Note 5)	-3.0	±1.0	3.0	
LIFETIME DRIFT CHARACTERISTICS						
Zero Current Offset Drift	$I_{OFFSET(D)}$	(Note 6)		±190		mA
Sensitivity Drift	$E_{S(D)}$	(Note 6)		±0.4		%
Total Error Drift	$E_{TOT(D)}$	(Note 6)		±3.8		%FS

Note 4: Typ values are 1σ(|mean|+σ). Min/max values are guaranteed by production test at T_A=25°C and T_A=85°C.
Note 5: Guaranteed by design and characterization. Typ values are 1σ(|mean|+σ), min/max values are 3σ(|mean|+/-3σ).
Note 6: Numbers are based on 3 lots qualification data, taking the shifts from among HTOL (1000 hours). Typical numbers are 1σ(|mean|+σ).

Table 9 – OCD ELECTRICAL CHARACTERISTICS

Unless otherwise noted: 3.15V < VCC < 3.45V, -40°C ≤ T_A ≤ 105°C, I(Vout) = 0, Typical values are for VCC = 3.3V and T_A = 25°C.

Parameter	Symbol	Test Conditions	Min	Typ	Max	Unit
OVERCURRENT FAULT CHARACTERISTICS						
$\overline{FAULTB}$ Response Time	$t_{RESPONSE}$	Time from IP > $I_{\overline{FAULTB}}$ to when $\overline{FAULTB}$ pin is pulled below $V_{\overline{FAULTB}}$; input current step from 0 to 1.5 ×$I_{\overline{FAULTB}}$		0.2		µs
$\overline{FAULTB}$ Range	$I_{\overline{FAULTB}}$	For parts rated for IP=5A; VOC voltage between 0 and 0.225*VCC		6		A
		For parts rated for IP=5A; VOC voltage between 0.225*VCC and 0.35*VCC		7.5		
		For parts rated for IP=5A; VOC voltage between 0.35*VCC and 0.5*VCC		10		
		For parts rated for IP=20A; VOC voltage between 0 and 0.225*VCC		24		
		For parts rated for IP=20A; VOC voltage between 0.225*VCC and 0.5*VCC		30		
		For parts rated for IP=50A; VOC voltage between 0 and 0.5*VCC		60		
$\overline{FAULTB}$ Output Low Voltage	$V_{\overline{FAULTB}}$	In fault condition; RF_{PU} = 2-10 kΩ		0.2		V
$\overline{FAULTB}$ Output High Voltage	$V_{\overline{FAULTB}}$	In fault condition; RF_{PU} = 2-10 kΩ			VCC	V
$\overline{FAULTB}$ Pull-Up Resistance	RF_{PU}		2		10	kΩ
OCD Threshold Setting Error	$E_{\overline{FAULTB}}$			6		%
VOC Input Range	V_{VOC}	For setting OCD trig threshold	0		VCC/2	V
VOC high input level to reset OCD	VIHocd		VCC-0.5		VCC	V
VOC High State Duration	TH_{VOC}		1			µs

AMR TECHNOLOGY

Anisotropic magnetoresistance (AMR) makes use of a common material, Permalloy, to act as a magnetometer. Permalloy is an alloy containing roughly 80% nickel and 20% iron. The alloy's resistance depends on the angle between the magnetization and the direction of current flow. In a magnetic field, magnetization rotates toward the direction of the magnetic field and the rotation angle depends on the external field's magnitude. Permalloy's resistance decreases as the direction of magnetization rotates away from the direction in which current flows, and is lowest when the magnetization is perpendicular to the direction of current flow. The resistance changes roughly as the square of the cosine of the angle between the magnetization and the direction of current flow. Permalloy is deposited on a silicon wafer and patterned as a resistive strip. The film's properties cause it to change resistance in the presence of a magnetic field. In a current sensor application, two of these resistors are connected in a Wheatstone bridge configuration to permit the measurement of the magnitude of the magnetic field produced by the current.

AMR properties are well behaved when the film's magnetic domains are aligned in the same direction. This configuration ensures high sensitivity, good repeatability, and minimal hysteresis. During fabrication, the film is deposited in a strong magnetic field that sets the preferred orientation, or "easy" axis, of the magnetization vector in the Permalloy resistors. AMR has better sensitivity than other methods and reasonably good temperature stability. The AMR sensor has sensitivity which is approximately a linear function of temperature.

FUNCTIONAL DESCRIPTION

Figure 2 provide block diagrams of the ratiometric gain. The AMR sensor monitors the magnetic field generated by the current flowing through the U shaped IP+/IP- package lead frame. The AMR sensor produces a voltage proportional to the magnetic field created by the positive or negative current in the IP+/IP- current loop while rejecting external magnetic interference. The sensor voltage is fed into a differential amplifier whose gain is temperature compensated. This is followed by an instrumentation amplifier output stage that provides a voltage that indicates the current passing through the IP+/IP- pins. To provide both positive and negative current data the Vout output pin is referenced to the ground. With no current flowing in the IP+/IP- pins, the voltage on the Vout output will typically equal the voltage of VCC/2. Positive IP+/IP- current causes the voltage on Vout to increase relative to VCC/2 while negative IP+/IP- current will cause it to decrease.

GAIN

The sensor resistors are biased to the VCC supply voltage and produce a differential voltage that is ratiometric to VCC. This configuration is suited to applications where the A-to-D or other circuitry receiving the current sensor output signals are biased by and ratiometric to the same supply voltage as the current sensor. The ratiometric configuration provides increased gain and resolution compared to fixed gain. The user can also provide a well-regulated 3.3V supply or monitor the VCC voltage and factor it into the current measurement to take advantage of the ratiometric configuration.

The Vout pin drives to 90% of VCC at full positive current and 10% of VCC at full negative current.

POWER UP / DOWN

An under-voltage lockout circuit monitors the voltage on the VCC pin. If the VCC voltage is less than the under-voltage threshold the MCR1101 is in an inactive state. Vout and Vcap both drive to ground. If the VCC voltage exceeds the under-voltage threshold Vout and Vcap are released and will drive to approximately half the VCC supply voltage and an initial calibration will commence. Once the initial calibration has completed the MCR1101 becomes active. Vout will slew to indicate the value of current flowing in the IP+/- conductor. Current flow in the IP+/- conductor with a VCC voltage less than the under-voltage threshold will not cause damage to the sensor.

OVERCURRENT DETECTION (OCD)

The MCR1101 have fast and accurate overcurrent fault detection circuitry. The overcurrent fault threshold ($I_{\overline{FAULTB}}$) is user-configurable via an external resistor divider and supports a range of 120% to 200% of the full-scale primary input (IP).
The overcurrent fault threshold ($I_{\overline{FAULTB}}$) is set via a resistor divider from VCC to ground on the VOC pin. The voltage on the VOC pin (V_{VOC}), may range from 0×VCC to 0.5×VCC.

For +/-5A parts
For V_{VOC} between 0×VCC and 0.225×VCC, the $I_{\overline{FAULTB}}$ threshold level is 1.2×IP.
For V_{VOC} between 0.225×VCC and 0.35×VCC, the $I_{\overline{FAULTB}}$ threshold level is 1.5×IP.
For V_{VOC} between 0.35×VCC and 0.5×VCC, the $I_{\overline{FAULTB}}$ threshold level is 2×IP.

For +/-20A parts
For V_{VOC} between 0×VCC and 0.225×VCC, the $I_{\overline{FAULTB}}$ threshold level is 1.2×IP.
For V_{VOC} between 0.225×VCC and 0.5×VCC, the $I_{\overline{FAULTB}}$ threshold level is 1.5×IP.

For +/-50A parts
For V_{VOC} between 0×VCC and 0.5×VCC, the $I_{\overline{FAULTB}}$ threshold level is 1.2×IP.

If the input current exceeds the OCD threshold value $I_{\overline{FAULTB}}$, the output pin $\overline{FAULTB}$ will transition low and stay low, even if input current drops below the threshold. In order to reset the $\overline{FAULTB}$ output the user needs to bring VOC pin to VCC and hold it there for at least THvoc. Once the OCD function is reset, the VOC voltage should return back to its normal operating voltage Vvoc. A switch SW1 on Figure 1 can be used for this. Other methods are available as well.

If OCD function is used, an OCD reset must be applied to the VOC pin after system power up, to put the OCD function and $\overline{FAULTB}$ pin in a known state.

The $\overline{FAULTB}$ output is active low open drain. A pull-up resistor should be connected between $\overline{FAULTB}$ and VCC. The VCC voltage will determine the high level of $\overline{FAULTB}$ signal. $\overline{FAULTB}$ low output voltage is below 200mV. The value of pull-up resistor is 2-10kOhm.

FREQUENCY RESPONSE

The MCR1101 offers a low noise and wideband response, with a 3dB magnitude bandwidth of 5.0MHz and 45deg phase bandwidth of 1.3MHz, as shown in the plots below.

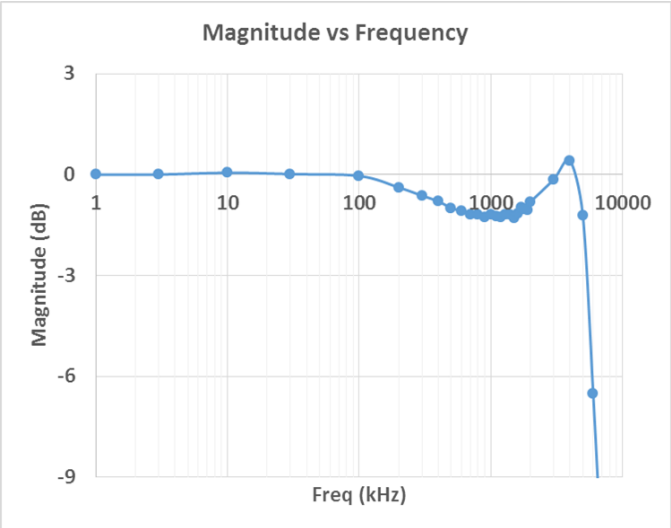

Figure 3 - Magnitude vs Frequency

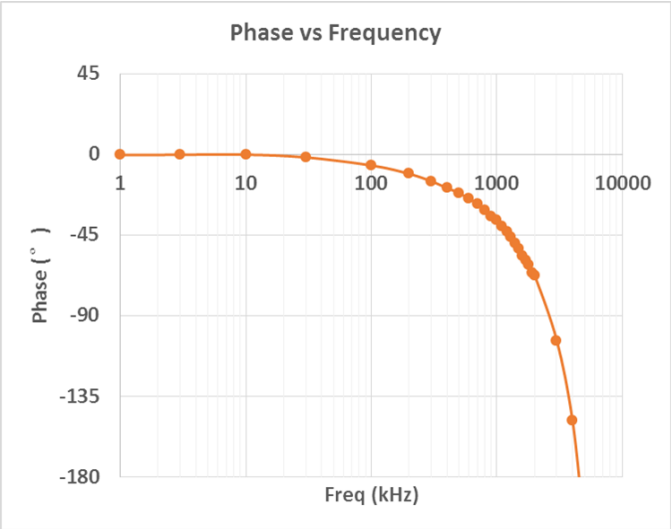

Figure 4 - Phase vs Frequency

RESPONSE TIME

Vout response time is the time interval from 80% of the IP to 80% of the Vout. The response time is 80ns typical.

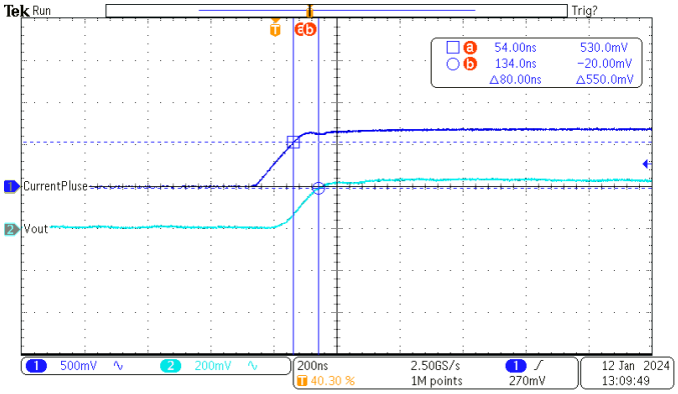

Figure 5 - Vout response time

DEFINITIONS OF DC ACCURACY

Definition of Zero Current Offset (I_{OFFSET})

I_{OFFSET} = [Vout(0A) – VCC/2]*(3.3/VCC) / Nominal Sensitivity.

Definition of Sensitivity Error (E_S)

Real transfer function can be fitted by linear curve [with input current I_{IN} swept from minimum negative ($-I_{FS}$) to maximum positive ($+I_{FS}$)] as follows:

$$Vout - VCC/2 = S_0 + S_1 I_{IN},$$

Sensitivity Error is defined as follows:

$E_S = S_1*(3.3/VCC)$ / Nominal Sensitivity – 1.

Definition of Linearity Error (E_L)

Real transfer function can be fitted by 3rd-order polynomial [with input current I_{IN} swept from minimum negative ($-I_{FS}$) to maximum positive ($+I_{FS}$)] as follows:

$$Vout - VCC/2 = S_0 + S_1 I_{IN} + S_2 I_{IN}^2 + S_3 I_{IN}^3,$$

where

I_{IN}: Real input current;
S_0: 0th-order fitting coefficient;
S_1: 1st-order fitting coefficient;
S_2: 2nd-order fitting coefficient;
S_3: 3rd-order fitting coefficient.

Linearity Error is defined as $E_L = (S_2 I_{IN}^2 + S_3 I_{IN}^3) / (S_1 I_{FS})$.

Definition of Total Error (E_{TOT})

E_{TOT} = [Vout(I_{FS}) – VCC/2]*(3.3/VCC)/Nominal Sensitivity/I_{FS}–1.

APPLICATIONS INFORMATION

The MCR1101 detects current by measuring the magnetic field generated by that current. Therefore, it's important to consider the effect of externally generated magnetic fields, whether from another current flowing in the system, a magnet, or electro-magnetic component.

In order to provide immunity to external fields, MCR1101 senses a differential field generated by the primary current, which flows through a U-shaped conductor inside the package. Therefore, to first order, the sensor will reject any common mode field originating from outside of its package.

However, it's still prudent to minimize the exposure to external fields. The MCR1101 is most sensitive to magnetic fields in the X-Y plane (i.e. the plane of the PCB surface), and is relatively insensitive to fields in the Z direction (perpendicular to the PCB surface). Thus when laying out the PCB, care should be taken to avoid a current passing directly underneath the device itself, because the magnetic field generated by that current will be parallel to the PCB surface.

When laying out the PCB, the traces carrying the input and output currents should approach the two sets of 4 input/output pins in a symmetric manner, from a direction perpendicular to the edge of the package (see Figure 6 below).

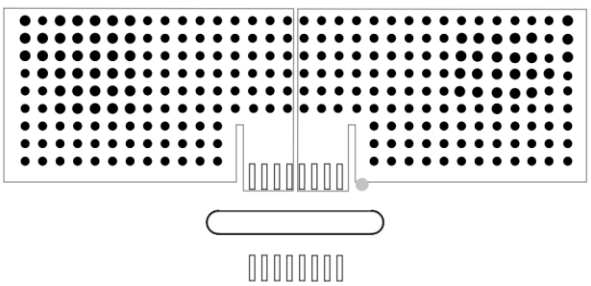

Figure 6 - Layout for current traces

Note:

The via break in the metal at either end of the package. The purpose of these is to prevent the input current from approaching the input pins from the lateral direction.

Safe Operating Area

The input current safe operating area (SOA) of ACEINNA current sensor is constrained by self-heating due to power dissipation in the input current carrying conductor. The SOA strongly depends on customer PCB layout (especially area and thickness of copper), operating ambient temperature and input current profile (amplitude and duration). The customer PCB layout design is particularly critical as it determines the transfer of heat generated due to self-heating away from the sensor and ACEINNA current sensor thermal behavior should be verified for customer use case and ensured the maximum junction temperature (150°C) is not exceeded. Figure 7 shows the continuous maximum current carrying capability of ACEINNA current sensor when mounted on our EVB [with 800mm^2 of 4oz copper on each layer (top and bottom), thermal vias connecting the layers].

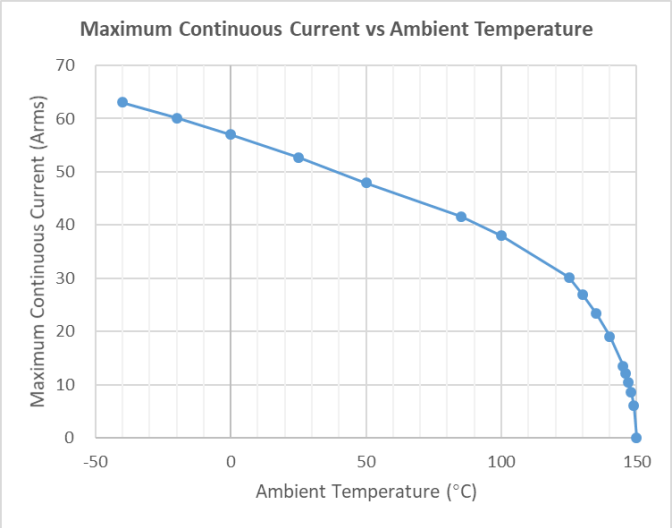

Figure 7 – Max Continuous Current vs Ambient Temperature

DEVICE MARKING

Production information is printed on the package surface by laser marking. Markings consist of 3 lines of characters including ACEINNA logo.

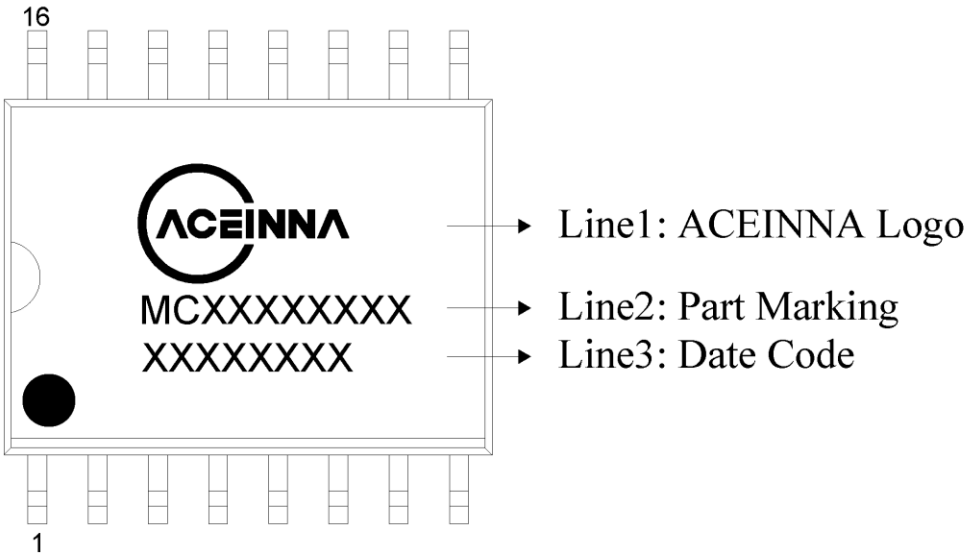

Part Marking (Line2)

MC A 1101 65 5

- 5: Supply voltage: 5-5V, 3-3.3V
- 65: Nominal current rating: 05-5A, 20-20A, 50-50A, 65-65A
- 1101: Internal code
- A: Internal supply type: A-Fixed Gain, R-Ratiometric
- MC: Product family: MC-Magnetic current sensor

Date Code (Line3)

X YY WW LLL

- LLL: Lot number
- WW: Date code: Week number
- YY: Date code: Last 2 digits of year
- X: Internal code (letter A-Z or number 0-9)

PACKAGE OUTLINE & RECOMMENDED LAND PATTERN INFORMATION – 16-pin SOIC

PACKAGE OUTLINE DRAWING

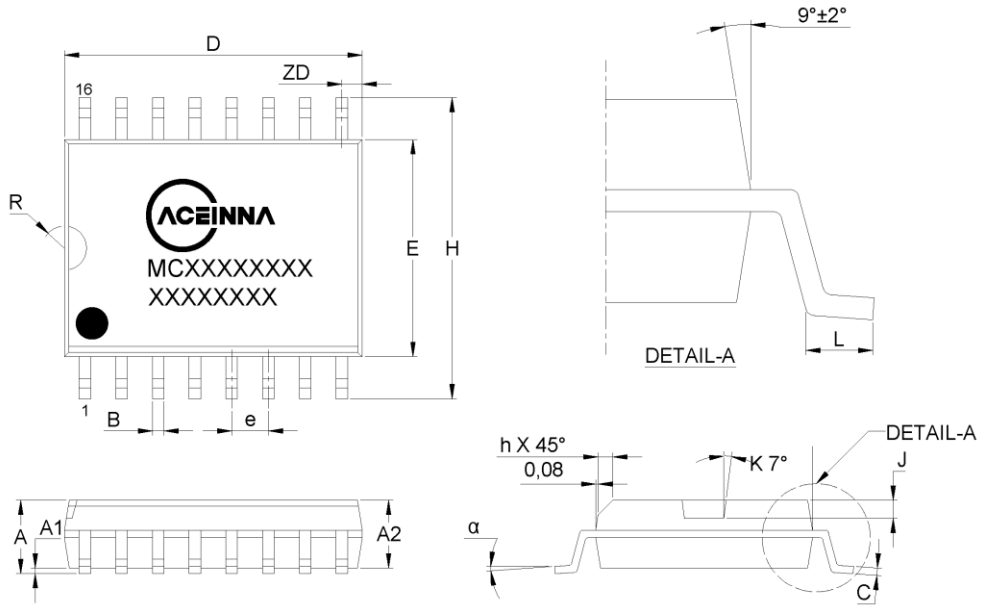

SYMBOL	SOIC-16LD	
	MILLIMETERS	
	MIN	MAX
A	2.44	2.64
A1	0.10	0.30
A2	2.24	2.44
B	0.36	0.46
C	0.23	0.32
D	10.11	10.31
E	7.40	7.60
e	1.27 BSC	
H	10.11	10.51
h	0.31	0.71
J	0.381 REF	
K	9° BSC	
L	0.51	1.01
R	0.76 REF	
ZD	0.66 REF	
α	0°	8°

RECOMMENDED LAND PATTERN

Unit: mm

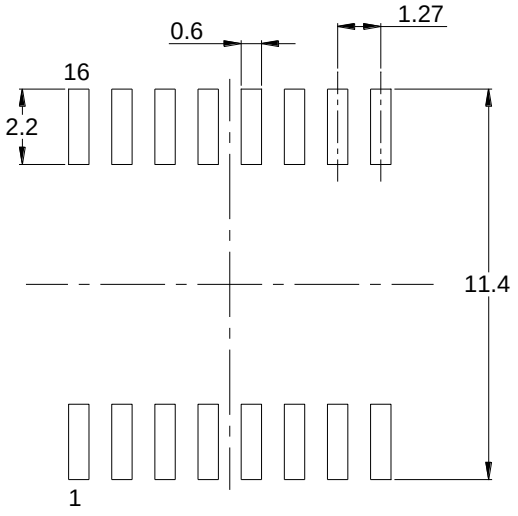

Note:
Recommended land pattern reference IPC7351B;
Adjust as necessary to meet application requirements and PCB layout tolerances.

RECOMMENDED REFLOW PROFILE

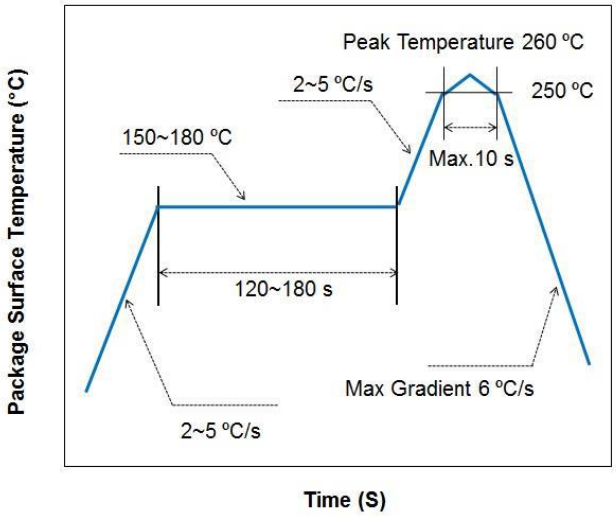

Figure 8 - Recommended Reflow Profile

Note:
Reflow is limited by 2 times;
The 2nd reflow cycle should be applied after device has cooled down at 25°C (room temperature);
The peak temperature is recommended to be in the range of 235°C to 250°C (not to exceed 260°C for 10 seconds);
Use no clean flux to avoid product contaminated by cleaning solvent.

Change History

Version	Status	Contents	Date	Editor	Approver
A	Release	Initial release for MCx1101-xx-3	2019/06/03	Bin Zhu	Noureddine
C	Release	Internal review for release to website	2021/04/08	Bin Zhu	Noureddine
E	Release	Revise UL/IEC/EN62368-1 and related information, Revise 5.0MHz 3dB Bandwidth due to ASIC upgrade Revise some specification based on AEC-Q100 test.	2024/03/25	Dalai Li	Teoman Ustun
G	Release	Correct a typo error.	2024/06/07	Dalai Li	Teoman Ustun
H	Release	Add description for Safe Operating Area of current sensor	2024/06/25	Dalai Li	Teoman Ustun
J	Release	Modify DEVICE MARKING; Add CTI rating and Modify isolation parameters; Modify ABSOLUTE MAXIMUM CURRENT RATING for 5A and 20A products; Modify LIFETIME DRIFT for 5A and 20A products; Add DEFINITIONS OF DC ACCURACY; Modify RECOMMENDED REFLOW PROFILE.	2026/02/28	Dalai Li	Teoman Ustun